For more information please contact
Spencer Saunders
spencer@t4media.co.uk

T4 Media Limited,
Elliot House
10-12 Allington Street,
London. SW1E 5EH

Tel: 020 7233 9777
Fax: 020 7233 9222

Scale = 100%

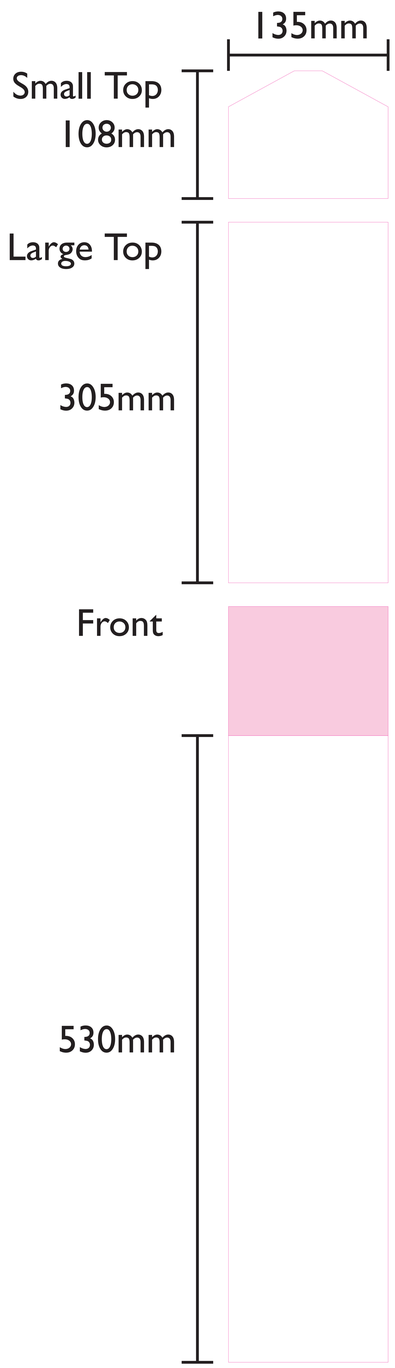

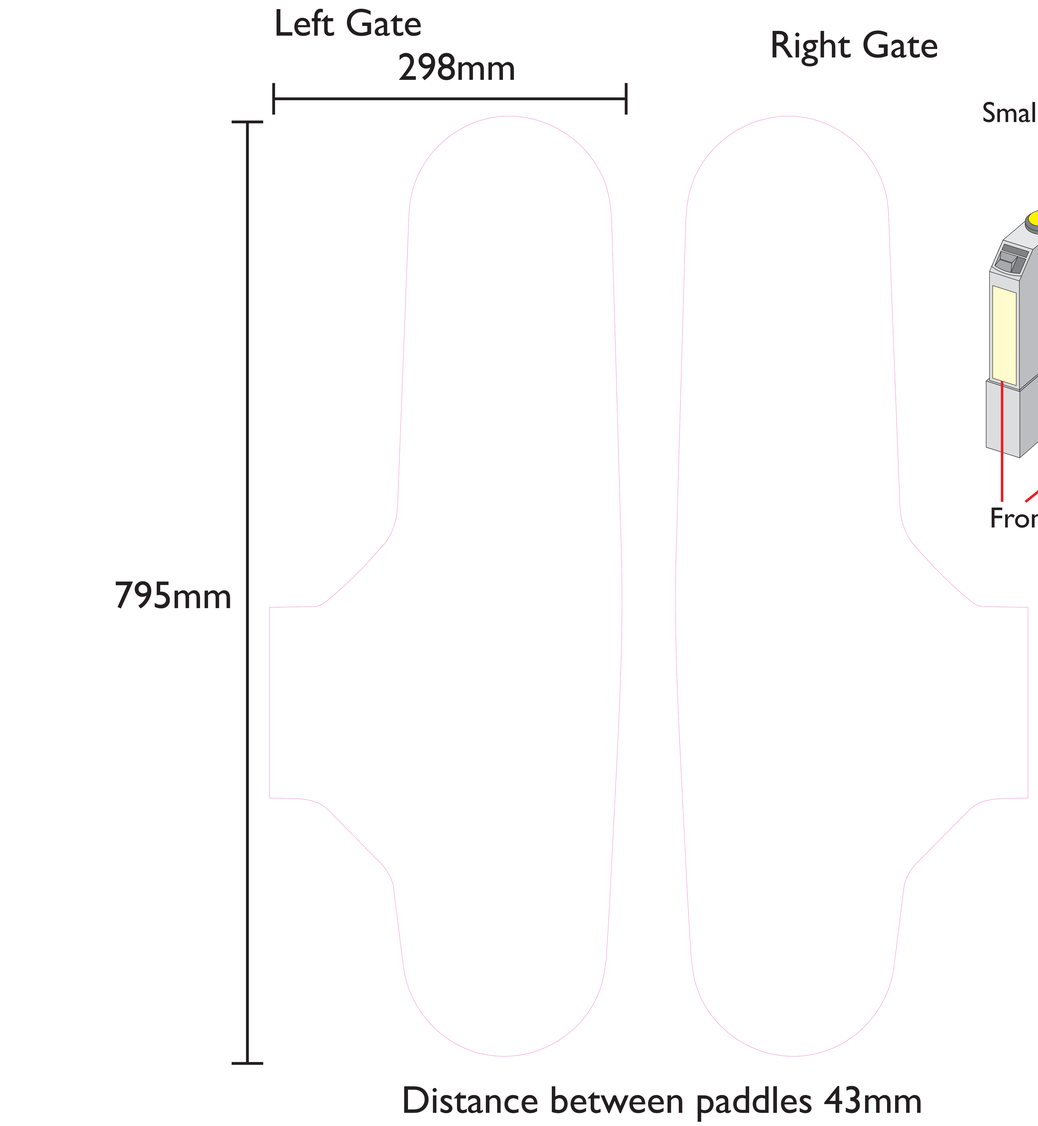

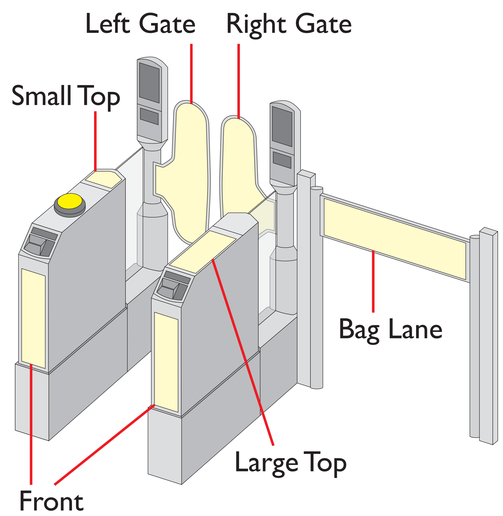

Tops
Please design the same creative to each top since you will get one or the other depending on whether there are smart card readers on the tops of the gates or not. Small tops are used where there is a smart card reader, and Large tops where there is not a smart card reader.

Artwork Guidelines

Files can be received on:
CD, DVD or email

Please supply all artwork on this template in Illustrator format and allow **25mm bleed** outside of the magenta guide lines.

All fonts should be **converted to outlines.**

Bitmap images should be in **CMYK** and be at least **80dpi** at final size for optimum image quality.

Creative Recommendations

Use of bold colours, clear images, strong branding, simple message - not too text heavy, relevance to environment and/or format, multiple creative executions available & recommended.

For more information please see
http://www.ambersigns.net

Artwork Delivery

Please deliver artwork to:
Mark Wilkie
Amber Signs & Graphics Ltd.
Unit 5, Claylands Road,
Bishops Waltham,
Southampton,
Hampshire.
SO32 1BH

Tel: 01489 893461
mark@ambersigns.net

Date:
12/11/08

Filename:
Adgate A1 Template